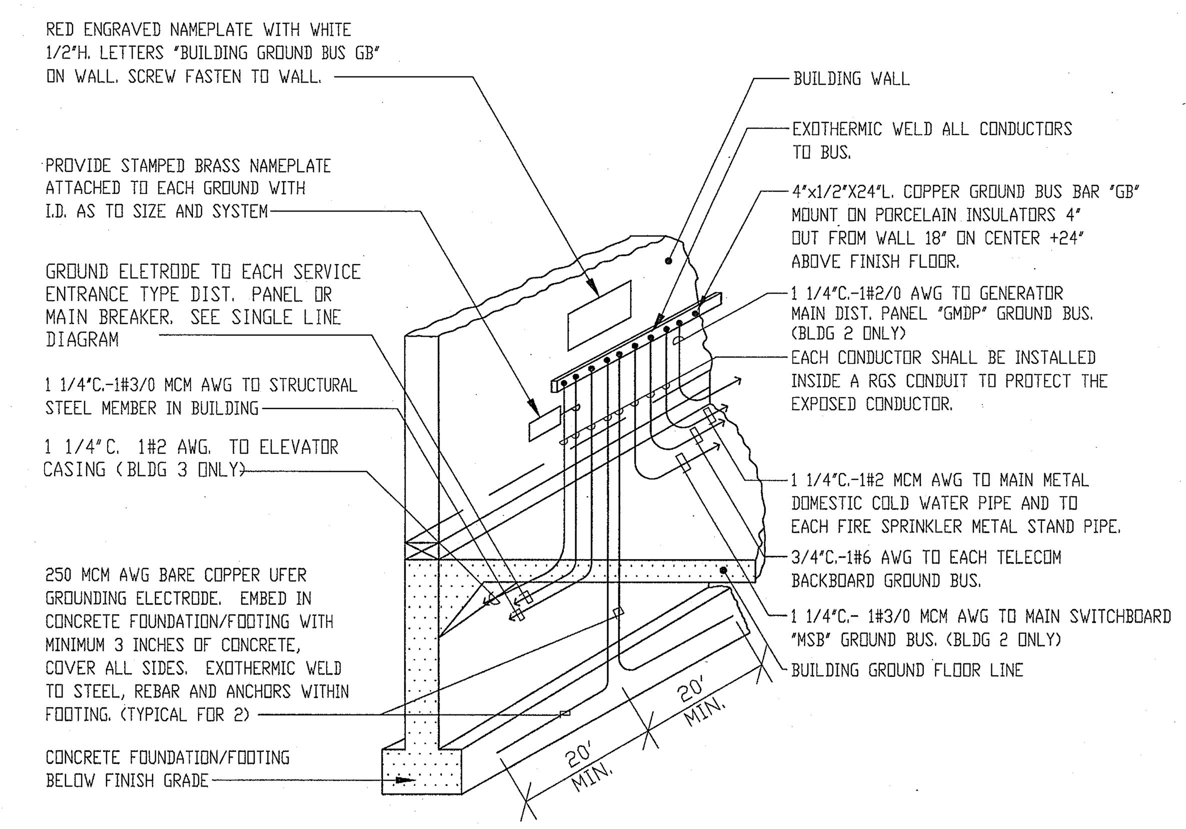

GROUND BUS GB DETAIL

SCALE NONE | 13

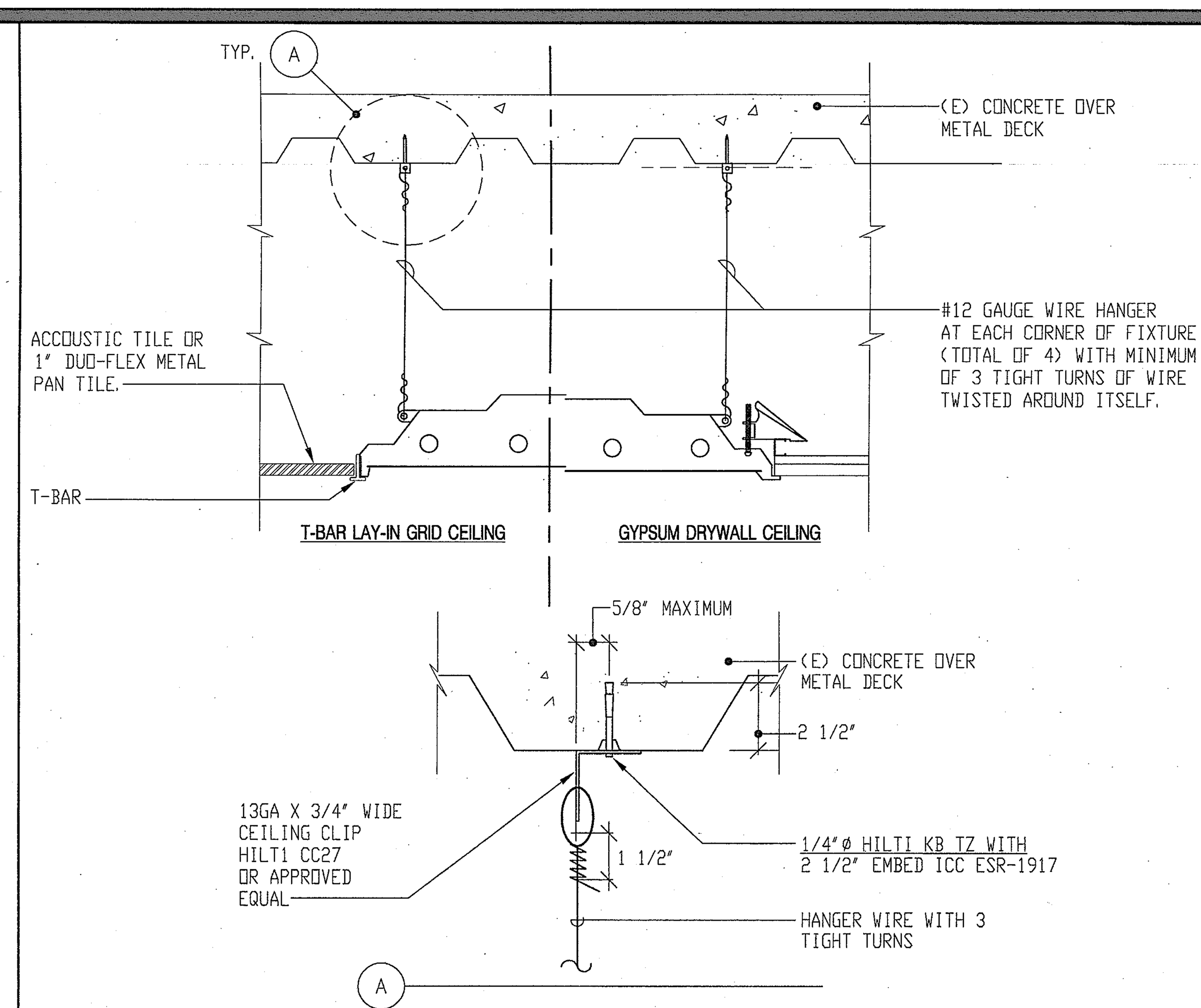

RECESSED LIGHTING FIXTURE MOUNTING DETAIL

SCALE NONE | 9

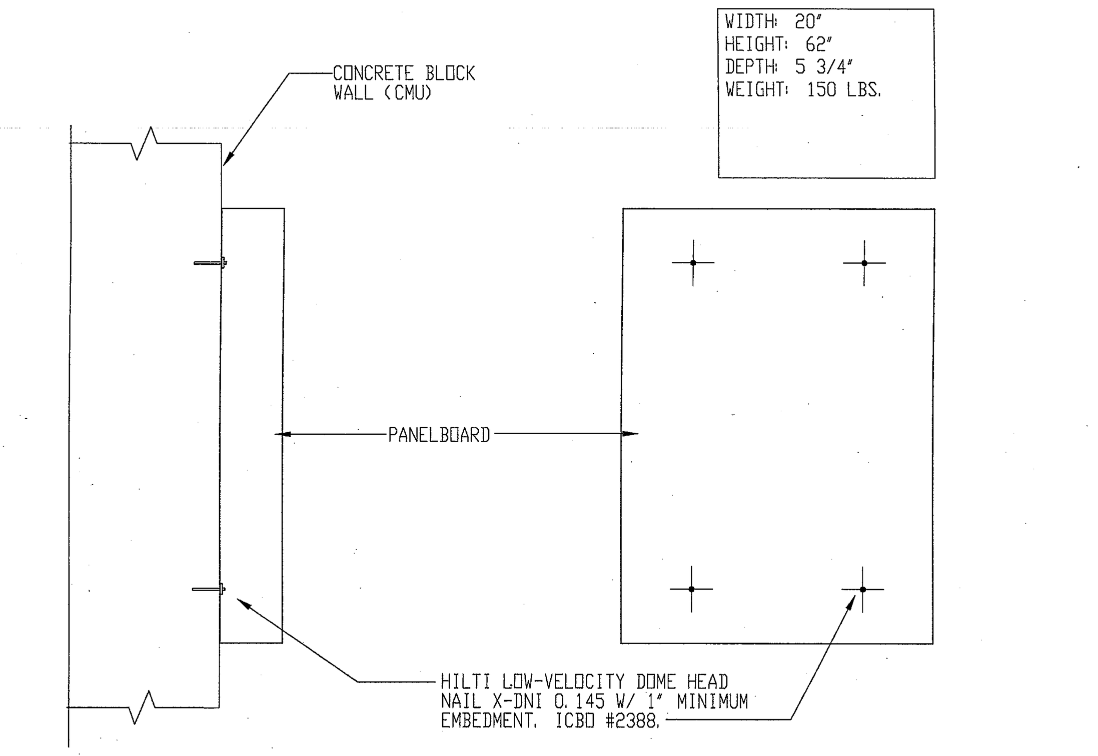

SURFACE MOUNTED EQUIPMENT ANCHORAGE - CMU WALL

SCALE NONE | 5

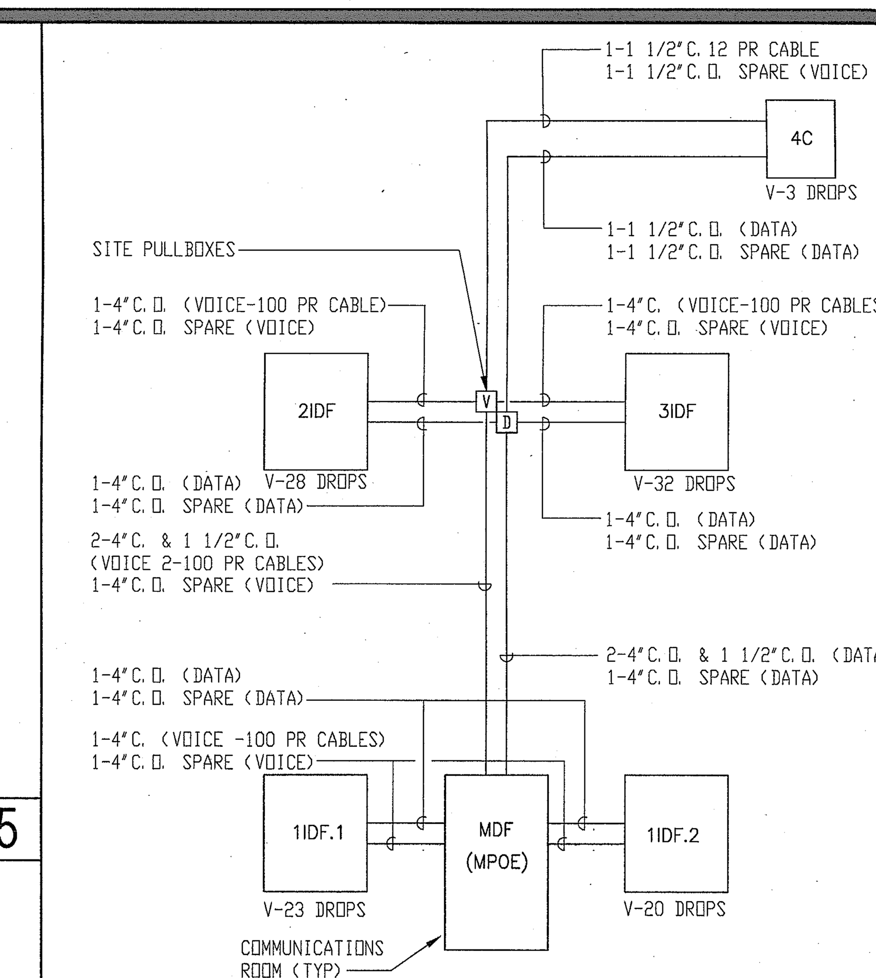

VOICE/DATA BLOCK DIAGRAM

SCALE NONE | 1

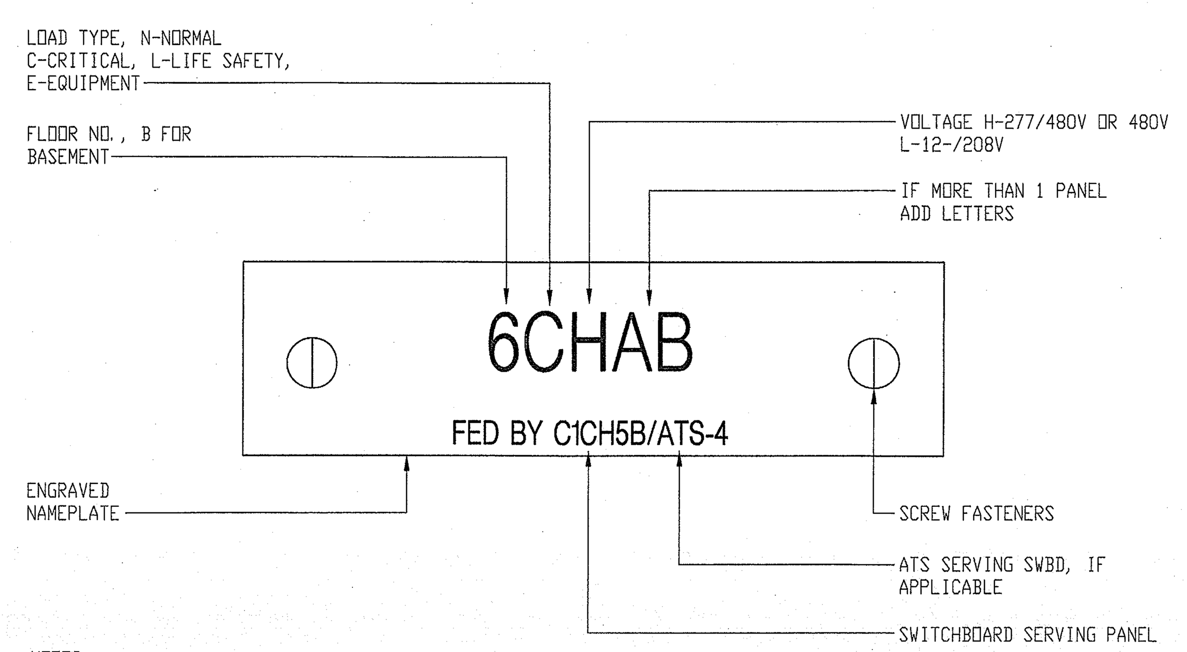

NOTES:

1. NAMEPLATE SHALL BE WHITE LAMINATED PLASTIC. LETTERING SHALL BE FACTORY ENGRAVED, 3/8" H. - 1ST LINE, 3/16" H. - 2ND LINE. LETTERING SHALL BE BLACK FOR NORMAL LOAD PANELS AND RED FOR ESSENTIAL LOAD (C, L, E) PANELS.
2. CENTER NAMEPLATE ON PANEL TRIM 1" ABOVE TOP OF PANEL DOOR.
3. NAMEPLATES SHALL BE ATTACHED TO PANEL WITH STAINLESS STEEL SCREW FASTENERS COUNTERSUNK FLUSH WITH NAMEPLATE FINISH.
4. SUBMIT NAMEPLATE SHOP DRAWING WITH EACH PANELBOARD SHOP DRAWING.

DISTRIBUTION EQUIPMENT ENGRAVED NAMEPLATE DETAIL

SCALE NONE | 14

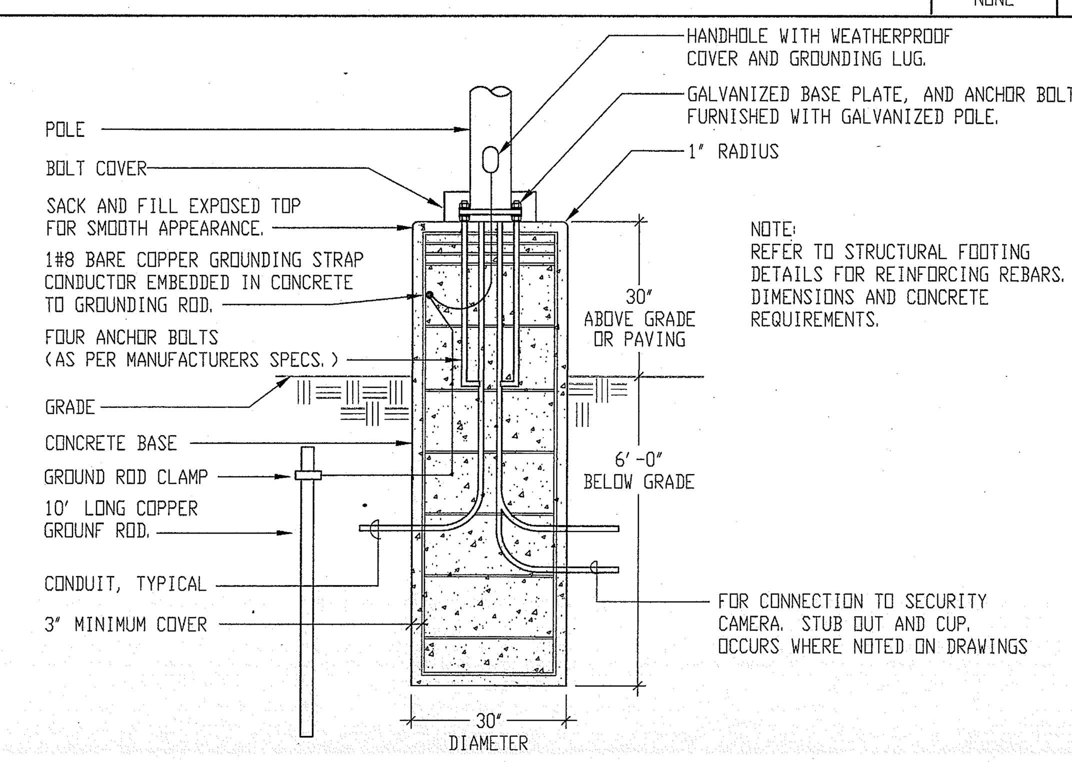

NOTE:
REFER TO STRUCTURAL FOOTING DETAILS FOR REINFORCING REBARS. DIMENSIONS AND CONCRETE REQUIREMENTS.

AREA LIGHTING CONCRETE BASE DETAIL

SCALE NONE | 10

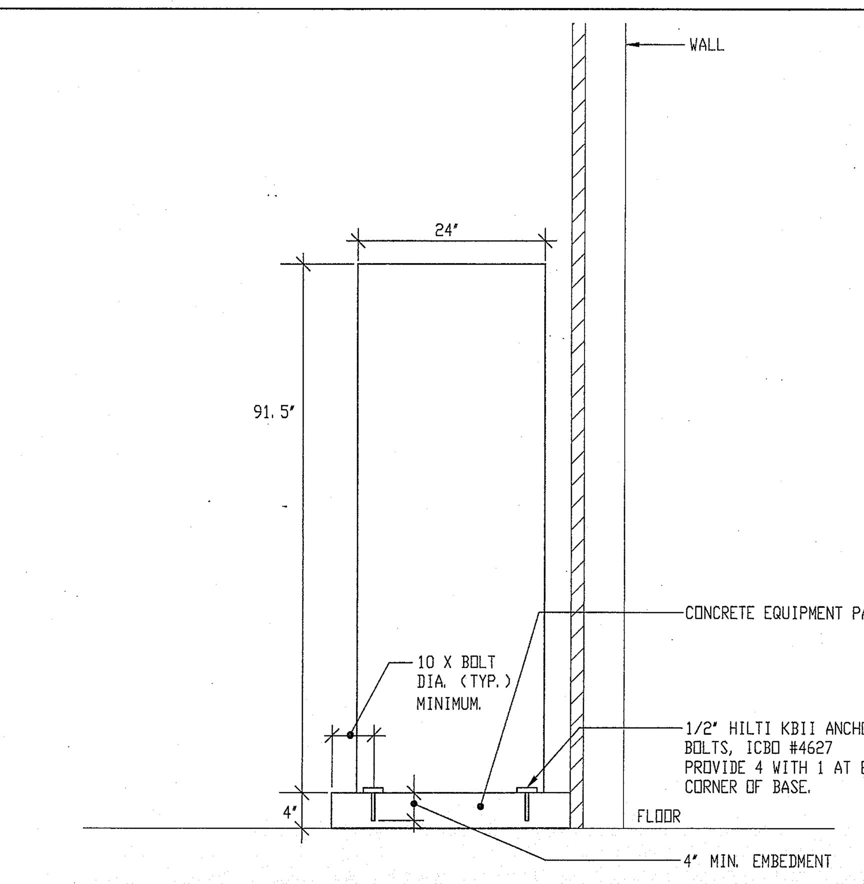

MAIN SWITCHBOARD ANCHORAGE DETAIL

SCALE NONE | 6

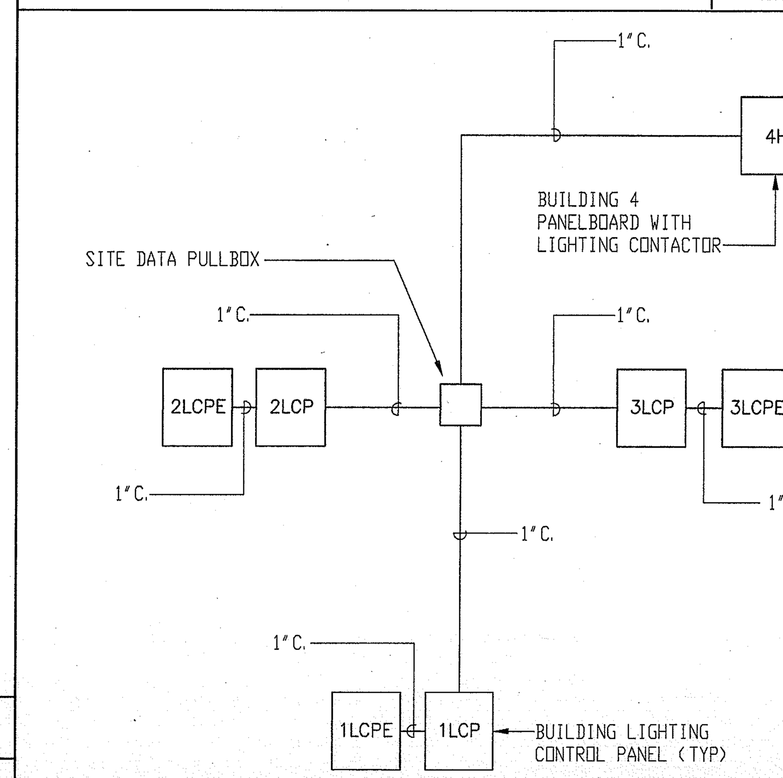

LIGHTING CONTROL SYSTEM BLOCK DIAGRAM

SCALE NONE | 2

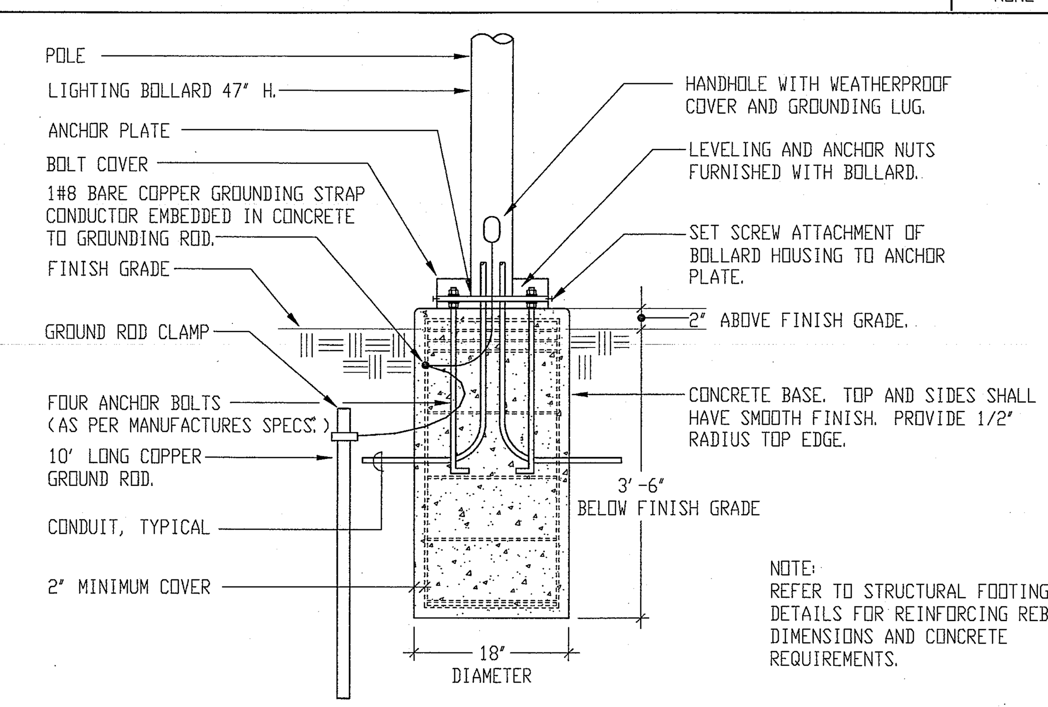

NOTE:
REFER TO STRUCTURAL FOOTING DETAILS FOR REINFORCING REBARS. DIMENSIONS AND CONCRETE REQUIREMENTS.

POSTLIGHT CONCRETE BASE DETAIL

SCALE NONE | 11

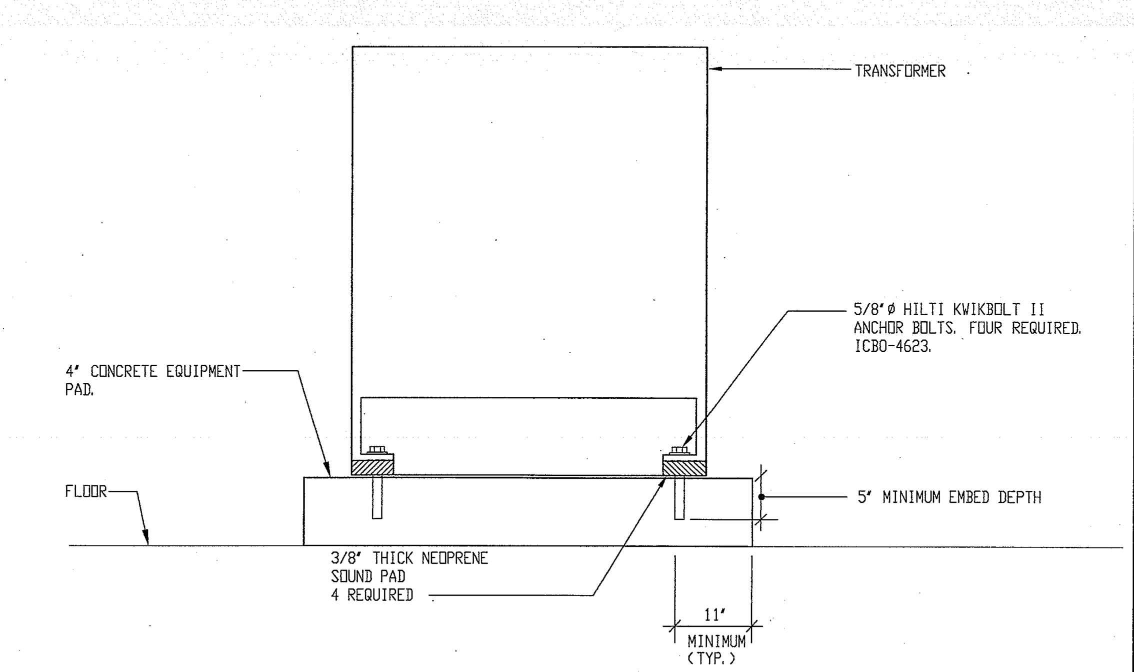

TRANSFORMER ANCHORAGE DETAIL

SCALE NONE | 7

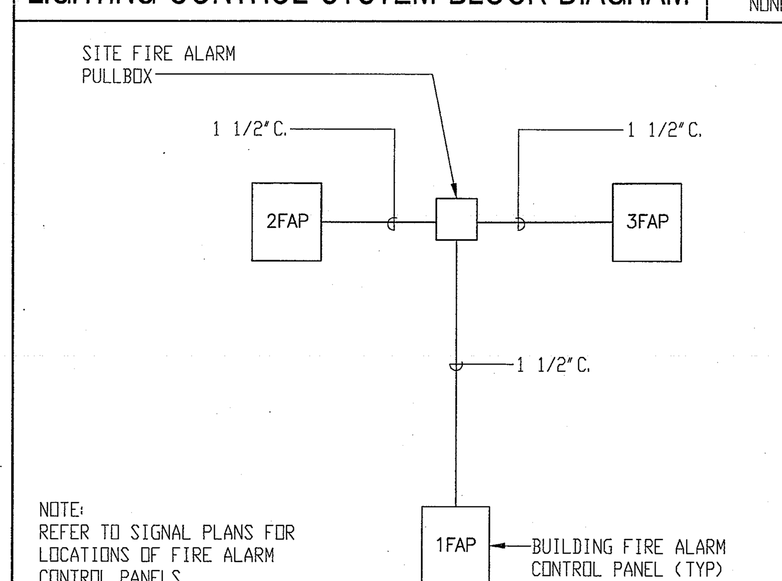

NOTE:
REFER TO SIGNAL PLANS FOR LOCATIONS OF FIRE ALARM CONTROL PANELS.

FIRE ALARM BLOCK DIAGRAM

SCALE NONE | 3

UL/ SYSTEM NO. W-L-1054

METAL PIPE THROUGH 1-HR. OR 2-HR. GYPSUM WALL ASSEMBLY

F-RATING = 1-HR. OR 2-HR.
T-RATING = 0-HR.
L-RATING AT AMBIENT = LESS THAN 1 CFM/SQ. FT.
L-RATING AT 400°F = 4 CFM/SQ. FT.

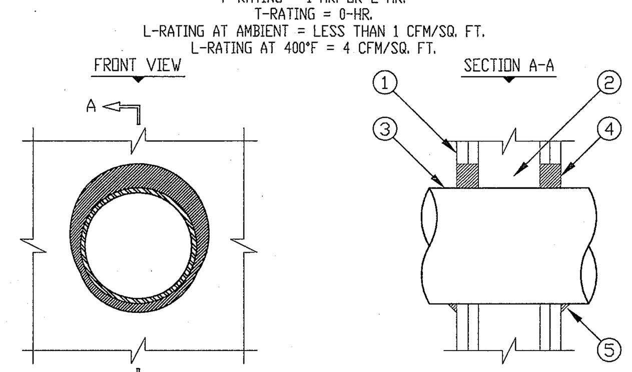

1. GYPSUM WALL ASSEMBLY (UL/ULC CLASSIFIED U300 OR U400 SERIES) (1-HR. OR 2-HR. FIRE-RATING) (2-HR. SHOWN).
2. (NOT SHOWN). WOOD STUDS TO CONSIST OF NOMINAL 2" x 4" LUMBER. STEEL STUDS TO BE MINIMUM 2-1/2" WIDE.
3. PENETRATING ITEM TO BE ONE OF THE FOLLOWING :
   A. MAXIMUM 30" DIAMETER STEEL PIPE (SCHEDULE 10 OR HEAVIER).
   B. MAXIMUM 30" DIAMETER CAST IRON PIPE.
   C. MAXIMUM 6" NOMINAL DIAMETER COPPER PIPE.
   D. MAXIMUM 6" NOMINAL DIAMETER STEEL CONDUIT.
   E. MAXIMUM 4" NOMINAL DIAMETER EMT.
4. HILTI FS-ONE HIGH PERFORMANCE INTUMESCENT FIRESTOP SEALANT :
   A. MINIMUM 5/8", FOR A 1-HR. FIRE-RATING.
   B. MINIMUM 1-1/4" DEPTH, FOR A 2-HR. FIRE-RATING.
5. MINIMUM 1/2" BEAD HILTI FS-ONE HIGH PERFORMANCE INTUMESCENT FIRESTOP SEALANT AT POINT OF CONTACT.

NOTES : 1. MAXIMUM DIAMETER OF OPENING :
A. 32-1/4" FOR STEEL STUD WALLS.
B. 14-1/2" FOR WOOD STUD WALLS.
2. ANNULAR SPACE = MINIMUM 0", MAXIMUM 2-1/2".

RATED WALL CONDUIT FIRE STOP DETAIL

SCALE NONE | 15

System No. C-AJ-1226
F RATING = 3-HR.
T RATING = 0-HR.

L Rating At Ambient - Less than 1 CFM/Sq Ft
L Rating At 400 F - 4 CFM/Sq Ft

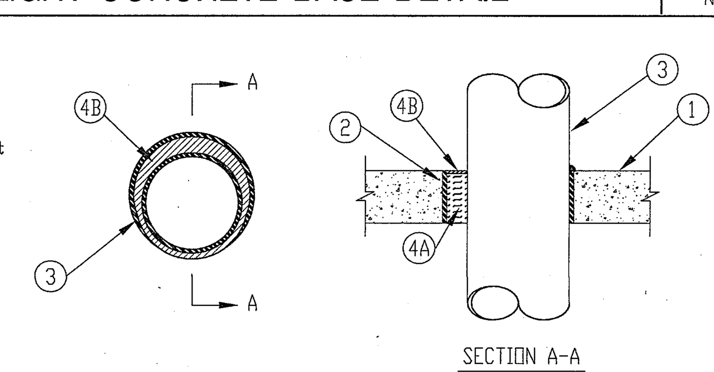

1. FLOOR OR WALL ASSEMBLMIN 4-1/2 IN. THICK REINFORCED LIGHTWEIGHT OR NORMAL WEIGHT (100-150 PCF) CONCRETE. WALL MAY ALSO BE CONSTRUCTED OF ANY UL CLASSIFIED CONCRETE BLOCKS*. MAX DIAM OF OPENING IS 32 IN.
2. METALLIC SLEEVE (OPTIONAL) NOM 32 IN. DIAM (OR SMALLER) SCHEDULE 40 (OR HEAVIER) STEEL SLEEVE CAST OR GROUTED INTO FLOOR OR WALL ASSEMBLY, FLUSH WITH FLOOR OR WALL SURFACES.
3. THROUGH-PENETRANTONE METALLIC PIPE OR CONDUIT TO BE INSTALLED EITHER CONCENTRICALLY OR ECCENTRICALLY WITHIN THE FIRESTOP SYSTEM. THE ANNULAR SPACE BETWEEN PIPE OR CONDUIT AND PERIPHERY OF OPENING SHALL BE MIN 0 IN. (POINT CONTACT) TO MAX 1-7/8 IN. PIPE MAY BE INSTALLED WITH CONTINUOUS POINT CONTACT. PIPE OR CONDUIT TO BE RIGIDLY SUPPORTED ON BOTH SIDES OF FLOOR OR WALL ASSEMBLY. THE FOLLOWING TYPES AND SIZES OF METALLIC PIPES OR CONDUITS MAY BE USED:
   A. STEEL PIPE — NOM 30 IN. DIAM (OR SMALLER) SCHEDULE 10 (OR HEAVIER) STEEL PIPE.
   B. IRON PIPE — NOM 30 IN. DIAM (OR SMALLER) CAST OR DUCTILE IRON PIPE.
   C. COPPER PIPE — NOM 6 IN. DIAM (OR SMALLER) REGULAR (OR HEAVIER) COPPER PIPE.
   D. COPPER TUBING — NOM 6 IN. DIAM (OR SMALLER) TYPE L (OR HEAVIER) COPPER TUBING.
   E. CONDUIT — NOM 6 IN. DIAM (OR SMALLER) STEEL CONDUIT.
   F. CONDUIT — NOM 4 IN. DIAM (OR SMALLER) STEEL ELECTRICAL METALLIC TUBING (EMT).
4. FIRESTOP SYSTEM THE FIRESTOP SYSTEM SHALL CONSIST OF THE FOLLOWING:
   A. PACKING MATERIAL MIN 4 IN. THICKNESS OF MIN 4 PCF MINERAL WOOL BATT INSULATION FIRMLY PACKED INTO OPENING AS A PERMANENT FORM. PACKING MATERIAL TO BE RECESSED FROM TOP SURFACE OF FLOOR OR FROM BOTH SURFACES OF WALL AS REQUIRED TO ACCOMMODATE THE REQUIRED THICKNESS OF FILL MATERIAL.
   B. FILL, VOID OR CAVITY MATERIAL* -- SEALANT MIN 1/4 IN. THICKNESS OF FILL MATERIAL APPLIED WITHIN THE ANNULUS, FLUSH WITH TOP SURFACE OF FLOOR OR WITH BOTH SURFACES OF WALL. AT THE POINT OR CONTINUOUS CONTACT LOCATIONS BETWEEN PIPE AND CONCRETE, A MIN 1/4 IN. DIAM BEAD OF FILL MATERIAL SHALL BE APPLIED AT THE CONCRETE/PIPE INTERFACE ON THE TOP SURFACE OF FLOOR AND ON BOTH SURFACES OF WALL.

HILTI CONSTRUCTION CHEMICALS, DIV OF
HILTI INC - FS-One Sealant
*Bearing the UL Classification Marking

RATED CONCRETE FLOOR/ WALL CONDUIT FIRE STOP DETAIL

SCALE NONE | 12

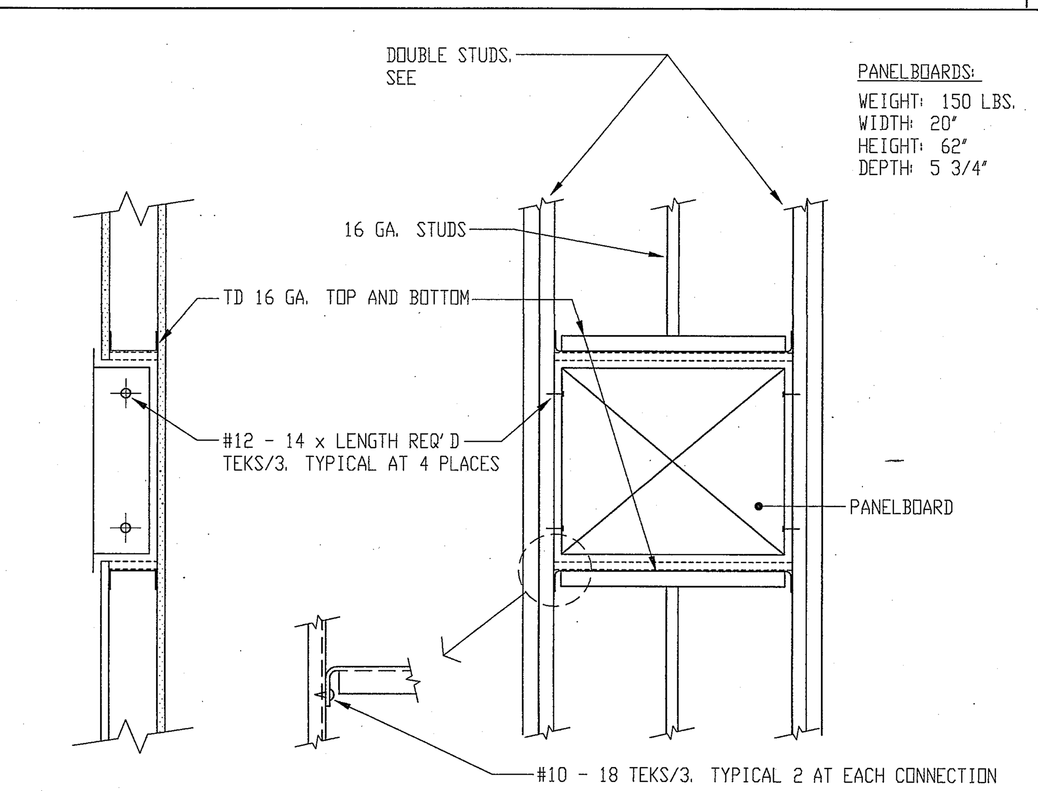

FLUSH MOUNTING PANELBOARD ANCHORAGE

SCALE NONE | 8

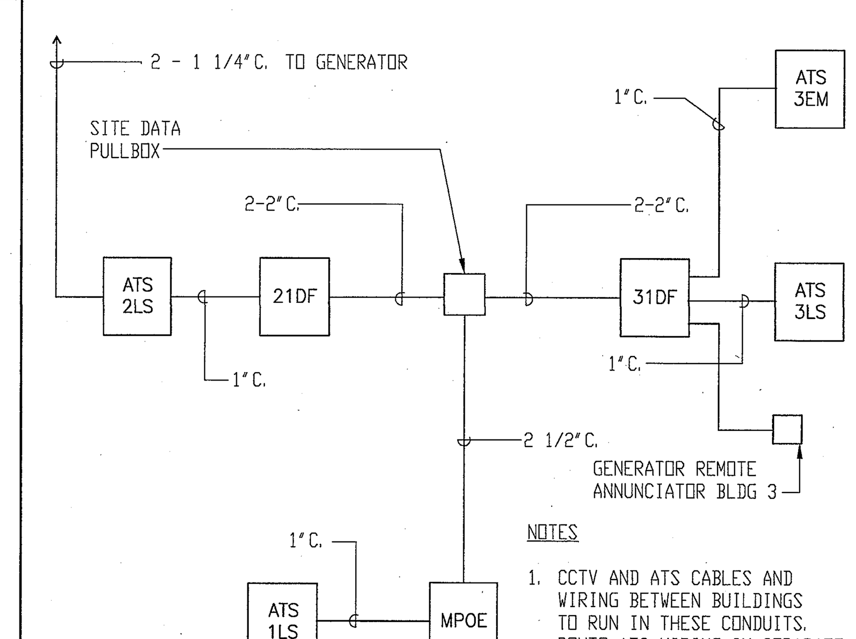

NOTES

1. CCTV AND ATS CABLES AND WIRING BETWEEN BUILDINGS TO RUN IN THESE CONDUITS. ROUTE ATS WIRING IN SEPARATE CONDUITS FROM CCTV CABLES.
2. PROVIDE ALL CABLES AND WIRING IN ACCORDANCE WITH MANUFACTURERS RECOMMENDATIONS FOR CCTV, ATS AND GENERATOR REMOTE ANNUNCIATOR.

MISCELLANEOUS SYSTEMS BLOCK DIAGRAM

SCALE NONE | 4

County of Orange
OC PUBLIC WORKS
Architecture & Engineering

0742 | Revisions
Sym. | Descrip. | Date | By

Consultants
FBA ENGINEERING
Consulting Engineers
3420 Irvine Avenue
Newport Beach, California 92660-3189
T: 949 852 9995 F: 949 852 1657
FBAengr.com
FBA # 446.025
Drawn ___ Chkd. ___ Date 11-26-09

A-E Seal

A-E ALEXANDER + HIBBS, AIA, INC.
ALEXANDER + HIBBS, AIA, INC.
Architecture and Planning
1200 N. JEFFERSON ST. SUITE A
ANAHEIM, CALIFORNIA 92807
(714) 630-3666
Design RH | Chkd. JP | Date Nov. 26, 2009

Sht Title DIAGRAMS & DETAILS
Project COUNTY OF ORANGE HEALTH CARE AGENCY
401 SOUTH TUSTIN STREET
401 SOUTH TUSTIN STREET
ORANGE, CA 92866
PROJ. NO. 100-042-P210-4200

Plan No.
52333-03608

Sheet
E-0.2

0742 COUNTY OF ORANGE HEALTH CARE AGENCY 401 SOUTH TUSTIN STREET

Filename: I:\446\025\E-0.2_446025.DWG (RHarrier)
Dimscale: 1=1(PS) Date: NOV 05, 2009 Time: 11:04 AM
Xrefs: x401 keyplan, x0742 BDR