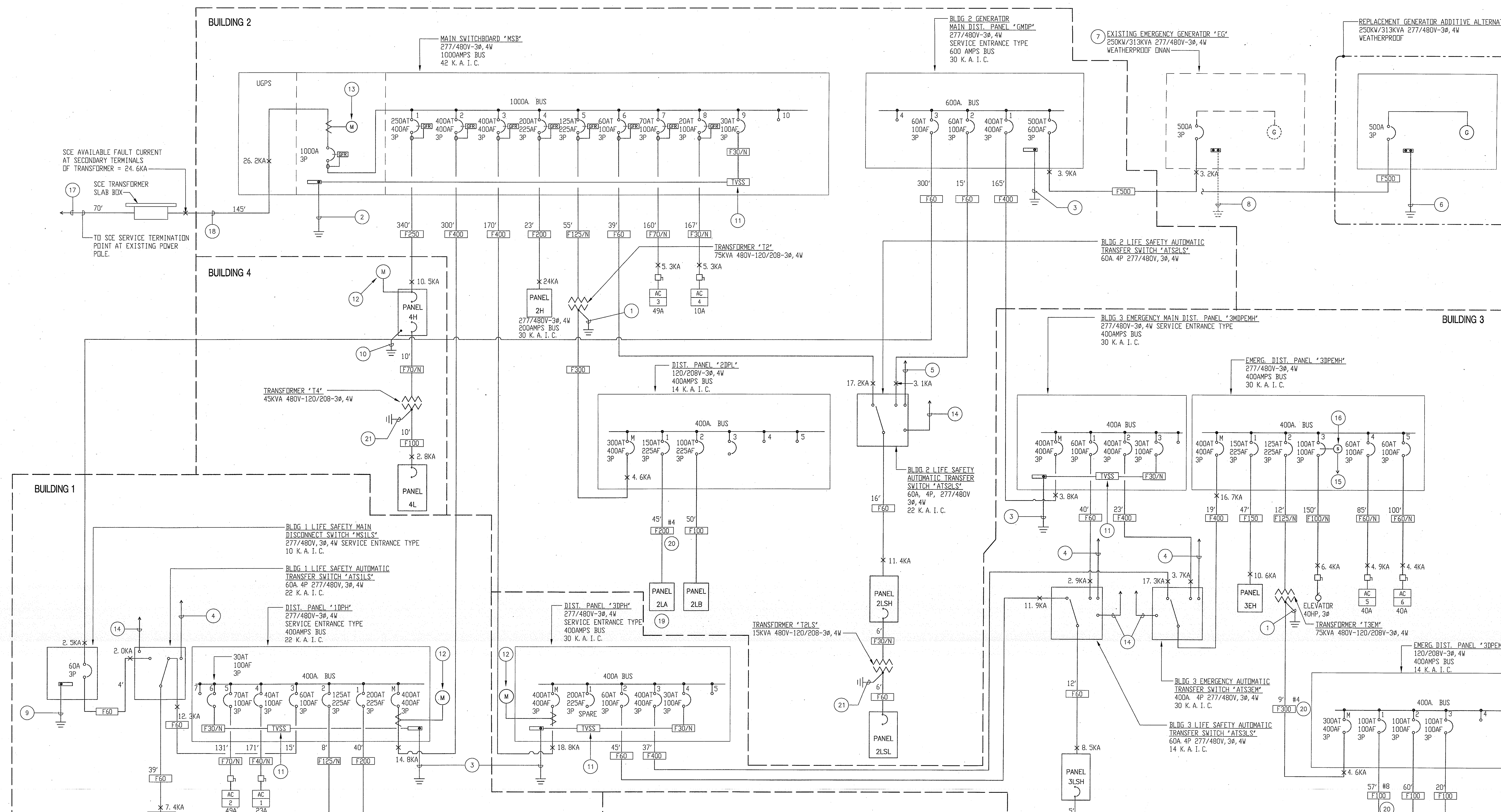

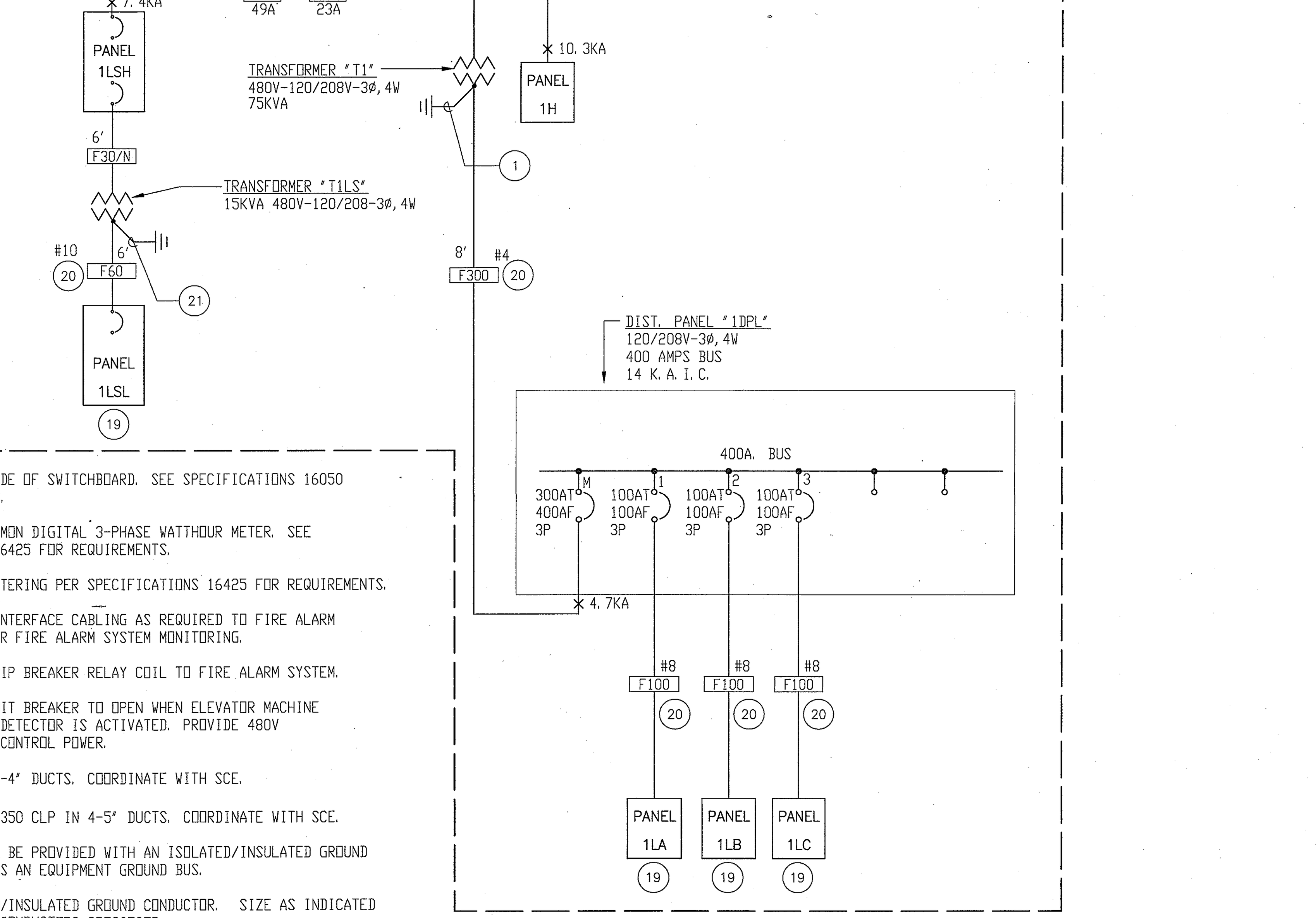

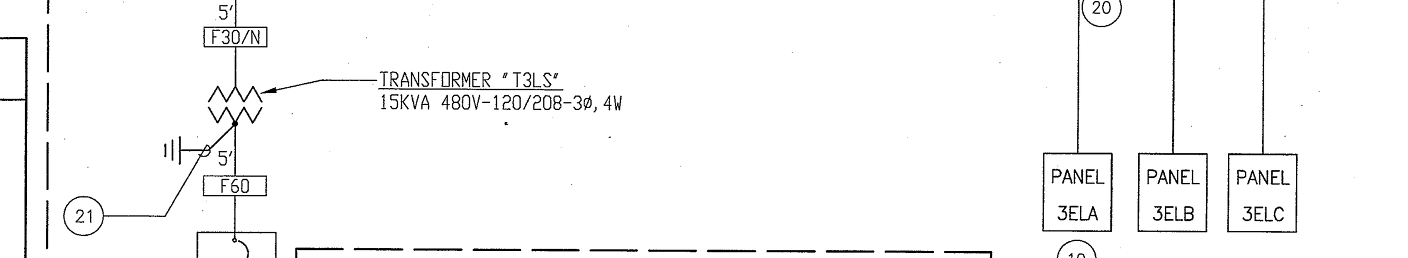

FEEDER SCHEDULE

COPPER CONDUCTORS THW 600V (AWG)

FEEDER TYPE	CONDUIT SIZE AND QUANTITY: QUAN.	CONDUIT SIZE AND QUANTITY: SIZE	CONDUCTORS IN EACH CONDUIT: PHASE/NEUTRAL QUAN.	PHASE/NEUTRAL SIZE	EQUIPMENT GROUND WIRE SIZE
F20	1	3/4"	4	12	12
F30	1	3/4"	4	10	10
F40	1	1"	4	8	10
F50	1	1 1/4"	4	6	10
F60	1	1 1/2"	4	4	10
F70	1	1 1/2"	4	4	8
F80	1	2"	4	2	8
F90	1	2"	4	2	8
F100	1	2"	4	1	8
F110	1	2"	4	1	6
F125	1	2"	4	1/0	6
F150	1	2"	4	1/0	6
F175	1	2"	4	2/0	6
F200	1	2 1/2"	4	3/0	6
F225	1	3"	4	4/0	4
F250	1	3"	4	250MCM	4
F275	1	4"	4	350MCM	4
F300	1	4"	4	350MCM	4
F350	1	4"	4	500MCM	2
F400	2	2 1/2"	4	3/0	2
F500	2	3"	4	250MCM	2
F600	2	4"	4	350MCM	1
F700	2	4"	4	500MCM	1/0
F800	3	4"	4	350MCM	1/0
F900	3	4"	4	350MCM	2/0
F1000	3	4"	4	500MCM	2/0
F1200	4	4"	4	350MCM	3/0
F1600	5	4"	4	500MCM	4/0
F2000	6	4"	4	500MCM	250MCM
F2500	7	4"	4	500MCM	350MCM
F3000	8	4"	4	500MCM	500MCM
F4000	11	4"	4	500MCM	500MCM
F20/N	1	3/4"	3	12	12
F30/N	1	3/4"	3	10	10
F40/N	1	1"	3	8	10
F50/N	1	1"	3	6	10
F60/N	1	1 1/4"	3	4	10
F70/N	1	1 1/4"	3	4	8
F80/N	1	1 1/4"	3	2	8
F90/N	1	1 1/4"	3	2	8
F100/N	1	1 1/2"	3	1	8
F110/N	1	1 1/2"	3	1	6
F125/N	1	2"	3	1/0	6
F150/N	1	2"	3	1/0	6
F175/N	1	2"	3	2/0	6
F200/N	1	2"	3	3/0	6
F225/N	1	2 1/2"	3	4/0	4
F250/N	1	2 1/2"	3	250MCM	4
F275/N	1	3"	3	350MCM	4
F300/N	1	3"	3	350MCM	4
F350/N	1	4"	3	500MCM	2
F400/N	2	2"	3	3/0	2
F500/N	2	2 1/2"	3	250MCM	2
F600/N	2	3"	3	350MCM	1
F700/N	2	4"	3	500MCM	1/0
F800/N	3	3"	3	350MCM	1/0
F350/U	-	-	-	-	-
F400/U	2	3"	4	4/0	2
F500/U	2	4"	4	350MCM	1/0
F600/U	2	4"	4	500MCM	2/0
F700/U	2	4"	4	500MCM	2/0
F800/U	3	4"	4	350MCM	2/0
F900/U	3	4"	4	500MCM	4/0
F1000/U	3	4"	4	500MCM	4/0
F1200/U	4	4"	4	500MCM	250MCM
F1600/U	6	4"	4	500MCM	250MCM
F2000/U	8	4"	4	500MCM	350MCM
F2500/U	9	4"	4	500MCM	500MCM
F3000/U	11	4"	4	500MCM	500MCM
F4000/U	15	4"	4	500MCM	500MCM
F350/NU	-	-	-	-	-
F400/NU	2	3"	3	4/0	2
F500/NU	2	4"	3	350MCM	1/0
F600/NU	2	4"	3	500MCM	1/0
F700/NU	2	4"	3	500MCM	1/0
F800/NU	3	4"	3	350MCM	2/0
F100/DN	1	2"	5	1	8
F125/DN	1	2 1/2"	5	1/0	6
F150/DN	1	2 1/2"	5	1/0	4
F225/DN	1	3"	5	4/0	4
F300/DN	1	4"	5	350MCM	2
F400/DN	2	3"	5	3/0	2
F600/DN	2	4"	5	350MCM	1
F800/DN	3	5"	5	350MCM	1/0
F1200/DN	4	4"	5	350MCM	3/0
F1600/DN	5	5"	5	500MCM	4/0

(11) MOUNT TVSS OUTSIDE OF SWITCHBOARD. SEE SPECIFICATIONS 16050 FOR REQUIREMENTS.

(12) PROVIDE E-MON D-MON DIGITAL 3-PHASE WATTHOUR METER. SEE SPECIFICATIONS 16425 FOR REQUIREMENTS.

(13) PROVIDE OWNER METERING PER SPECIFICATIONS 16425 FOR REQUIREMENTS.

(14) 3/4"C. 6#14 OR INTERFACE CABLING AS REQUIRED TO FIRE ALARM CONTROL PANEL FOR FIRE ALARM SYSTEM MONITORING.

(15) CONNECT SHUNT TRIP BREAKER RELAY COIL TO FIRE ALARM SYSTEM.

(16) SHUNT TRIP CIRCUIT BREAKER TO OPEN WHEN ELEVATOR MACHINE FROM/SHAFT HEAT DETECTOR IS ACTIVATED. PROVIDE 480V TRANSFORMER FOR CONTROL POWER.

(17) 3-1/C #2JCN IN 1-4" DUCTS. COORDINATE WITH SCE.

(18) 4-1/C 3-700 & 1-350 CLP IN 4-5" DUCTS. COORDINATE WITH SCE.

(19) PANELBOARD SHALL BE PROVIDED WITH AN ISOLATED/INSULATED GROUND BUSBAR AS WELL AS AN EQUIPMENT GROUND BUS.

(20) PROVIDE ISOLATED/INSULATED GROUND CONDUCTOR. SIZE AS INDICATED IN ADDITIION TO CONDUCTORS SPECIFIED.

(21) 3/4"C. 1#6 GRD. TO STRUCTURAL STEEL AND 3/4"C. 1#6 GRD. TO C.W. PIPE.

COORDINATION STUDY

ELECTRICAL CONTRACTOR SHALL INCLUDE A OVERCURRENT DEVICE COORDINATION, ARC FLASH STUDY ANALYSIS AND FAULT CURRENT /DEVICE EVALUATION STUDY.

ALL STUDIES SHALL BE PERFORMED USING POWER TOOLS FOR WINDOWS BY SKM SYSTEMS, INC.

THE COORDINATION STUDY SHALL INCLUDE ALL OVERCURRENT DEVICES FROM THE SWITCHGEAR AND GENERATOR TO THE LAST BRANCH CIRCUIT PROTECTION.

THE COORDINATION STUDY SHALL DEMONSTRATE COORDINATION OF CIRCUIT BREAKERS WITH INTEGRAL GROUND FAULT PROTECTION.

THE COORDINATION STUDY SHALL ALSO DEMONSTRATE COORDINATION BETWEEN MOTOR/TRANSFORMER IN RUSH AND UPSTREAM OVERCURRENT PROTECTION. SELECT THE APPROPIATE C/B TYPE TO WITHSTAND THE INRUSH.

THE COORDINATION STUDY SHALL INCLUDE A TABLE OF ALL ADJUSTABLE CIRCUIT BREAKER SETTINGS IN THE SYSTEM.

CONTRACTOR SHALL DEMONSTRATE IN THIER SUBMITTED STUDY HOW THE MANUFACTURER WILL ARCHIVE CODE REQUIRED SYSTEM COORDINATION AND FAULT CURRENT PROTECTION.

THE FAULT CURRENT STUDY SHALL BE PERFORMED USING THE ACTUAL FAULT CURRENT AVAILABLE AT THE SWITCHGEAR, AND INCLUDE CONTRIBUTION FROM ALL MOTORS IN THE SYSTEM.

FAULT CURRENT STUDY SHALL INCLUDE A DEVICE EVALUATION WHICH WILL INCLUDE AN EVALUATION OF ALL SWITCHBOARDS, PANELBOARDS, OVERCURRENT DEVICES AND DISCONNECT SWITCHES. THE DEVICE EVALUATION SHALL INCLUDE ALL DERATING REQUIRED BY ANSI STANDARDS.

PRELIMINARY FAULT CURRENT ARC FLASH STUDY/ANALYSIS, AND COORDINATION STUDY SHALL BE SUBMITTED WITH SWITCHBORD SHOP DRAWING PACKAGE.

EQUIPMENT RATINGS SHALL EXCEED THE AVAILABLE FAULT CURRENT AT EACH DEVICE. SERIES RATED EQUIPMENT IS PERMITTED. PROVIDE SERIES RATING INFORMATION WITH SHOP DRAWING SUBMITTAL.

FINALIZED STUDIES SHALL BE PREPARED BEFORE EQUIPMENT IS MANUFACTURED.

STUDIES SHALL BE SIGNED AND SEALED BY THE PROFESSIONAL ELECTRICAL ENGINEER LICENCED IN THE STATE OF CALIFORNIA UNDER WHOSE DIRECTION THE STUDIES ARE PERFORMED. CONTRACTOR MUST SUBMIT THIS INFORMATION AND MAKE ALL ADJUSTMENTS IN THE A/C RATINGS TO ARCHIEVE THEIR STUDY. INCLUDE ALL COSTS FOR A COMPLETE SYSTEM.

THE FAULT CURRENT STUDY ARC FLASH STUDY/ANALYSIS, AND COORDINATION STUDY MUST BE SUBMITTED WITH THE SWITCHBOARD SHOP DRAWING PACKAGE.

KEY NOTES

(1) 1"C. 1#2 GRD. TO STRUCTURAL STEEL AND 1"C. 1#2 GRD. TO C.W. PIPE.

(2) 1 1/4"C. 1#4/0 GRD. TO BUILDING GROUND BUS. PROVIDE SUPPLEMENTARY GROUNDING ELECTRODE CONDUCTOR WITH GROUNDING ROD FOR COLD WATER PIPE, FOR BUILDING STEEL STRUCTURE AND TO CONCRETE ENCASED FOOTING REINFORCING BARS OF NOT LESS THAN 1/2" DIAMETER AT LEAST 20' IN DIRECT CONTACT WITH THE EARTH.

(3) 1"C. 1#2 GRD TO BUILDING GROUND BUS. PROVIDE SUPPLEMENTARY GROUNDING ELECTRODE CONDUCTOR WITH GROUNDING ROD FOR COLD WATER PIPE, FOR BUILDING STEEL STRUCTURE AND TO CONCRETE ENCASED FOOTING REINFORCING BARS OF NOT LESS THAN 1/2" DIAMETER AT LEAST 20' IN DIRECT CONTACT WITH THE EARTH.

(4) 1"C. 6#12 TO "ATS2LS" IN BUILDING 2. REFER TO DIAGRAM ON DETAIL 4 SHEET E-0.2.

(5) 1 1/4"C. 6#10 TO GENERATOR "EG" START CONTROL.

(6) 1"C. 1#2 GRD. TO GENERATOR GROUND RODS.

(7) CONTRACT WITH CUMMINS DISTRIBUTOR TO REPLACE EXISTING 1200A.T. GENERATOR CIRCUIT BREAKER WITH 500A.T. CIRCUIT BREAKER MATCHING EXISTING MERLIN GERIN CK1200N BREAKER AND TO RECONNECT ALTERNATOR FOR 277/480VOLT OPERATION.

(8) (E) GROUND TO (E) GROUND ROD.

(9) 3/4"C, 1#10GRD. TO BUILDING GROUND BUS. PROVIDE SUPPLEMENTARY GROUNDING ELECTRODE CONDUCTOR WITH GROUNDING ROD FOR COLD WATER PIPE, FOR BUILDING STEEL STRUCTURE AND TO CONCRETE ENCASED FOOTING REINFORCING BARS OF NOT LESS THAN 1/2" DIAMETER AT LEAST 20' IN DIRECT CONTACT WITH THE EARTH.

(10) 3/4"C. 1#8GRD. TO BUILDING GROUND BUS. PROVIDE SUPPLEMENTARY GROUNDING ELECTRODE CONDUCTOR WITH GROUNDING ROD FOR COLD WATER PIPE, FOR BUILDING STEEL STRUCTURE AND TO CONCRETE ENCASED FOOTING REINFORCING BARS OF NOT LESS THAN 1/2" DIAMETER AT LEAST 20' IN DIRECT CONTACT WITH THE EARTH.

SINGLE LINE DIAGRAM NOTES

1. DASHED LINE WORK INDICATES EXISTING EQUIPMENT, DEVICES AND FEEDERS. SOLID LINE WORK INDICATES EQUIPMENT, DEVICES FEEDERS AND WORK PROVIDED IN THIS CONTRACT.
2. ALL FEEDERS SHALL BE COPPER WITH 90°C. (THHN/THWN) INSTALLATION.
3. NOT USED.
4. THE AMPACITY OF 600VOLTS OR LESS CONDUCTORS SHALL BE BASED ON THE TERMINALS NOT EXCEED 60°C.(140°F) FOR CONDUCTOR SIZE 14 THROUGH 1 AWG OR 75°C.(167°F) FOR CONDUCTOR SIZES OVER 1 AWG.
5. ALL SWITCHBOARD, TRANSFORMER AND PANELBOARD TERMINATIONS SHALL BE SUITABLE FOR COPPER UL LIST WIRE OR CABLE. TERMINATIONS SHALL BE RATED FOR USE WITH CONDUCTOR AMPACITY AS ASSIGNED IN THE NEC 75°C. TABLE.
6. WHERE SERIES COMBINATION RATINGS ARE USED PROVIDE A CAUTIONARY LABEL TO THE SERIES RATED DEVICE COVER STATING: "CAUTION-SERIES RATED SYSTEM 22,000A. AVAILABLE. IDENTIFIED REPLACEMENT COMPONENT REQUIRED.
7. UNLESS NOTED OTHERWISE. THE INTERRUPTING CAPACITY OF THE CIRCUIT BREAKERS IN 120/208 VOLT PANELBOARDS SHALL BE 10,000 A.I.C. TYPICAL.
8. UNLESS NOTED OTHERWISE. THE INTERRUPTING CAPACITY OF THE CIRCUIT BREAKERS IN 277/480 VOLT PANELBOARDS SHALL BE 14,000 A.I.C. TYPICAL.
9. FEEDER LENGTH INDICATED IS USED ONLY FOR CALCULATIONS AND NOT FOR ESTIMATE.
10. ALL EXTERIOR PANELS AND EQUIPMENT SHALL BE NEMA-3R TYPE ENCLOSURES.

County of Orange
OC PUBLIC WORKS
Architecture & Engineering

Revisions
0742
Sym. | Descrip. | Date | By

Consultants
FBA ENGINEERING
Consulting Engineers
3420 Irvine Avenue
Newport Beach, California 92660-3189
T: 949 852 9995 F: 949 852 1657
FBAengr.com
FBA # 446.025
Drawn ___ Chkd. ___ Date 11-26-09

A-E Seal

A-E ALEXANDER + HIBBS, AIA, INC.
ALEXANDER + HIBBS, AIA, INC.
Architecture and Planning
1200 N. JEFFERSON ST. SUITE A
ANAHEIM, CALIFORNIA 92807
(714) 630-3886
Design RH Chkd. JP Date Nov. 26, 2009

Sht Title SINGLE LINE DIAGRAM
Project COUNTY OF ORANGE HEALTH CARE AGENCY
401 SOUTH TUSTIN STREET
401 SOUTH TUSTIN STREET
ORANGE, CA 92866
PROJ. NO. 100-042-P210-4200

Plan No.
52333-03608

Sheet
E-0.1

0742 COUNTY OF ORANGE HEALTH CARE AGENCY 401 SOUTH TUSTIN STREET
Filename: I:\446\025\E-0.1_446025.DWG (JVega) Dimscale: 1=1(PS) Date: SEP 30, 2009 Time: 1:28 PM Xrefs: x401 keyplan, x0742 BDR