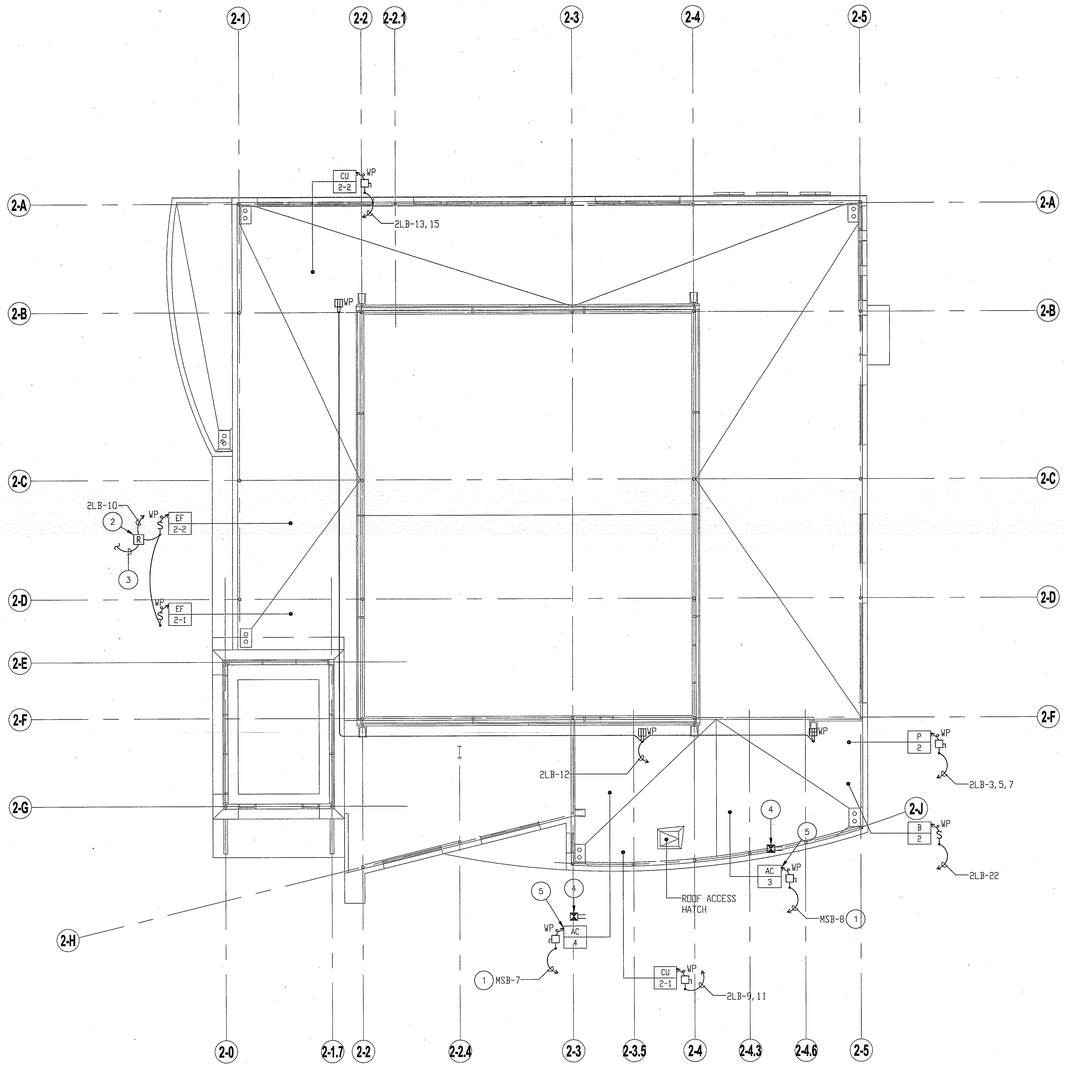

KEYNOTES

1. REFER TO SINGLE LINE DIAGRAM, SHEET E-0.1. FOR FEEDER REQUIREMENTS.
2. CONTROL RELAY BY MECHANICAL CONTRACTOR.
3. CONTROL INTERLOCK WITH AC UNIT (AC-3). COORDINATE WITH MECHANICAL CONTRACTOR.
4. INTERFACE FIRE ALARM ADDRESSABLE IN-DUCT TYPE SMOKE DETECTOR WITH FIRE ALARM SYSTEM IN THE BUILDING. COORDINATE WITH MECHANICAL CONTRACTOR.
5. CONNECT TO AC'S SUPPLY FAN VFD AS REQUIRED. COORDINATE WITH MECHANICAL CONTRACTOR.

KEYPLAN

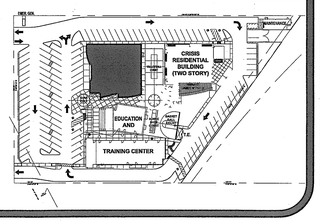

BUILDING 2 - ROOF PLAN SCALE: 1/8"=1'-0" 1

County of Orange
OC PUBLIC WORKS
Architecture & Engineering

Revisions

Sym.	Descrip.	Date	By

0742

Consultants
FBA ENGINEERING
Consulting Engineers
3420 Irvine Avenue
Newport Beach, California 92660-3189
T: 949 852 8855 F: 949 852 1687
FBAeng.com
FBA # 446.025
Drawn ___ Chkd. ___ Date 11-25-09

A-E Seal
REGISTERED PROFESSIONAL ENGINEER
STEVEN L. FISTER
No. E 10212
Exp. 06-30-10
STATE OF CALIFORNIA

A-E ALEXANDER + HIBBS, AIA, INC.
ALEXANDER + HIBBS, AIA, INC.
Architecture and Planning
3000 Bristol Street, Suite A
Costa Mesa, 92627
(714) 556-3388
Design RH Chkd. JP Date Nov. 20, 2009

Sht Title BUILDING 2 - ROOF PLAN
Project COUNTY OF ORANGE HEALTH CARE AGENCY
401 SOUTH TUSTIN STREET
401 SOUTH TUSTIN STREET
ORANGE, CA 92866
PROJ. NO. 100-042-P210-4200

Plan No.
52333-03608

Sheet
E-2.2.4

0742 COUNTY OF ORANGE HEALTH CARE AGENCY 401 SOUTH TUSTIN STREET