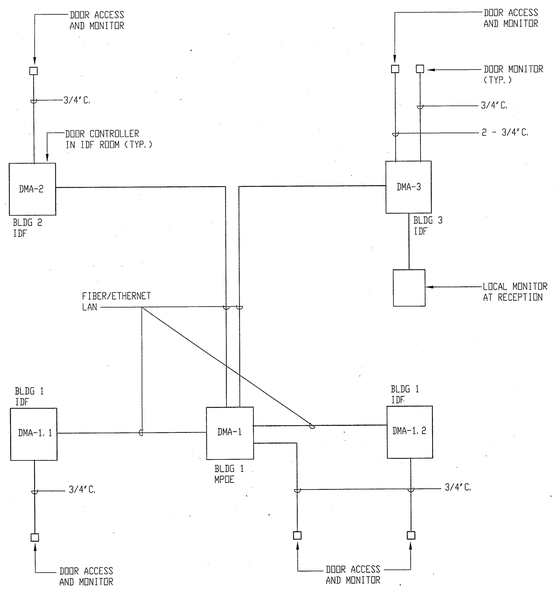

DOOR MONITORING & ACCESS CONTROL BLOCK DIAGRAM

SCALE: NONE

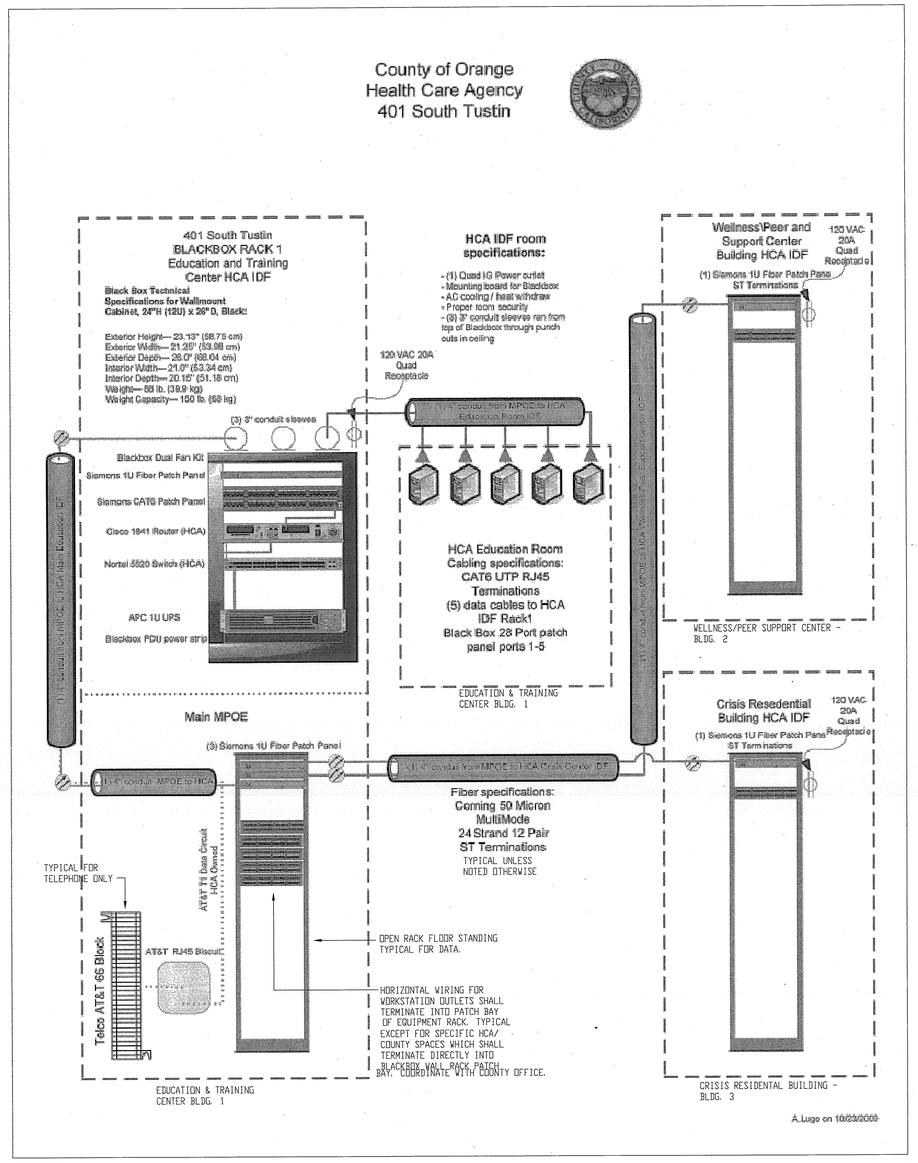

County of Orange
OC PUBLIC WORKS
Architecture & Engineering

Revisions				
Sym.	Descrip.	Date	By	

0742

Consultants
FBA ENGINEERING
Consulting Engineers
Data Communications
Newport Beach, California 92660-2489
T 949.852.0884 F 949.852.1837
FBAengr.com
FBA # 446.025
Drawn | Chkd. | Date 12-26-09

A-E Seal

A-E ALEXANDER + HIBBS, AIA, INC.
ALEXANDER + HIBBS, AIA, INC.
Architecture and Planning
1200 N. Jefferson, St. Suite A
Anaheim, California 92807
(714) 630-3388
Design RH | Chkd. JP | Date Nov. 26, 2009

Sht Title DATA SYSTEM INFRUSTRUCTURE DIAGRAM
Project COUNTY OF ORANGE HEALTH CARE AGENCY
401 SOUTH TUSTIN STREET
401 SOUTH TUSTIN STREET
ORANGE, CA 92866
PROJ. NO. 100-042-P210-4200

Plan No.
52333-03608

Sheet
E-0.10

0742 COUNTY OF ORANGE HEALTH CARE AGENCY 401 SOUTH TUSTIN STREET