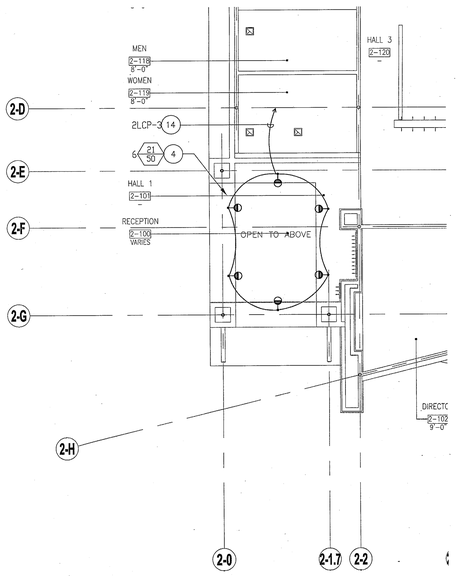

BUILDING 2 TOWER LIGHTING PLAN

SCALE: 1/8"=1'-0" | 2

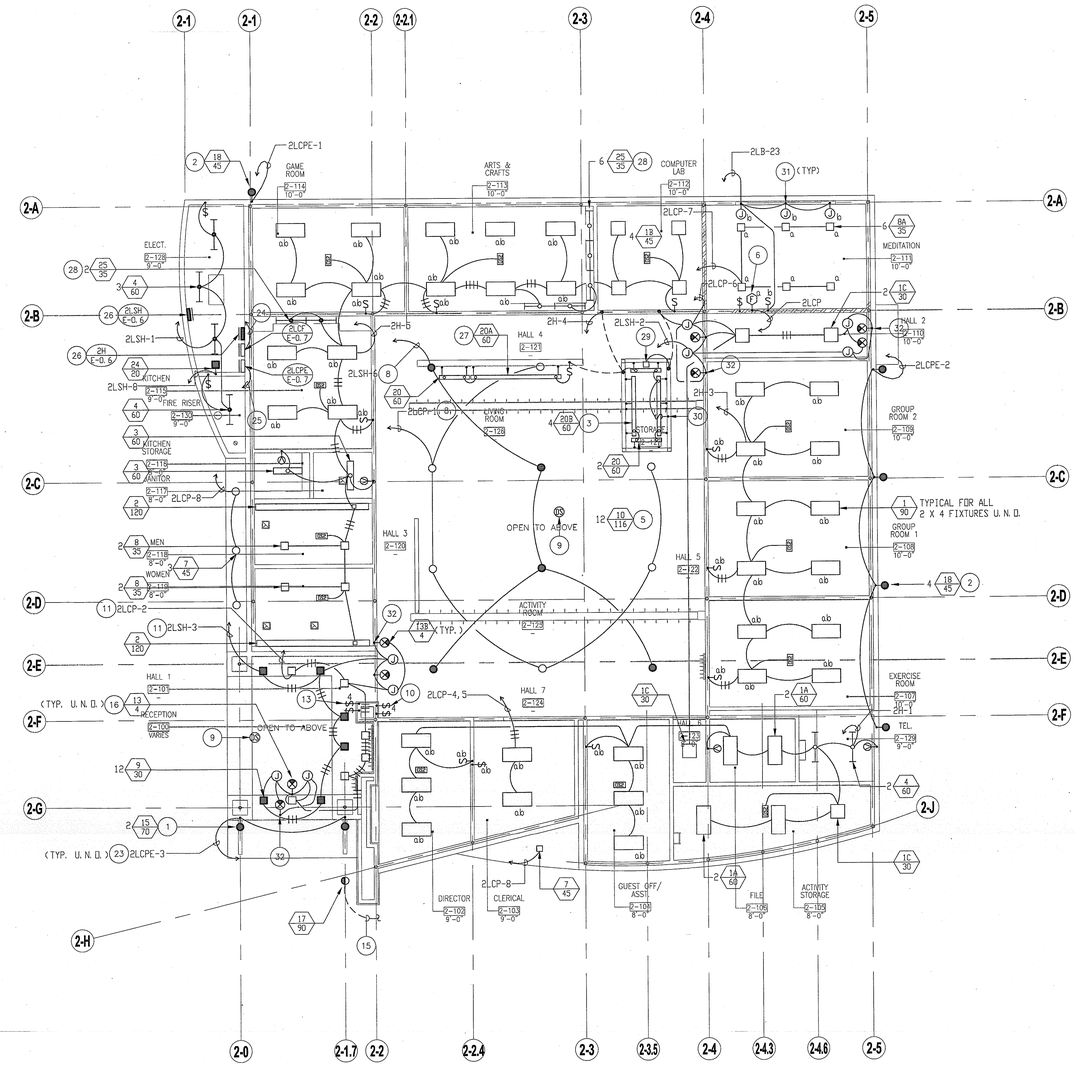

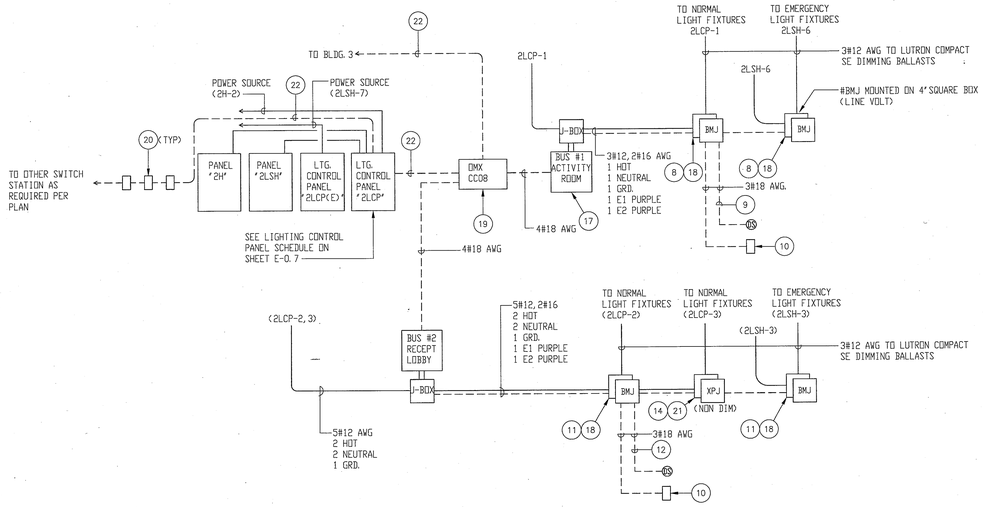

ECOSYSTEM/XPS CONTROL WIRING DIAGRAM

BUILDING 2 - LIGHTING PLAN

SCALE: 1/8"=1'-0" | 1

KEYNOTES

1. MOUNT +8'-8" TO TOP OF FIXTURE. ORIENT FOR 90% DOWNLIGHT.
2. MOUNT +8'-8" TO TOP OF FIXTURE.
3. WALL MOUNT +7'-6" AIM LIGHT UP TO LIGHT KALWAL WINDOWS ABOVE.
4. MOUNT FIXTURES ON TOP OF SOFFIT. AIM LIGHTS TO UNIFORMALLY LIGHT KALWAL WINDOWS ON OPPOSITE WALL AND CEILING.
5. MOUNT +16" AFF TO BOTTOM OF FIXTURE.
6. WALL BOX DIMMER STATION, +45" AND TIME CLOCK OVERRIDE.
7. NOT USED.
8. ROUTE 3#12 TO LUTRON #BMJ AND BUS #1.
9. DAYLIGHT SENSOR 3#18 TO LUTRON BMJ ON BUS #1. STEM MOUNT IF REQUIRED TO BE FIXTURE HEIGHT.
10. 4-SCENE WALL CONTROL #CC-4BRL-WH REQUIRES 3#18 ON BMJ ON BUS #1.
11. ROUTE 3#12 TO LUTRON #BMJ AND BUS #2.
12. DAYLIGHT SENSOR 3#18 TO LUTRON BMJ ON BUS #2. STEM MOUNT IF REQUIRED TO BE FIXTURE HEIGHT.
13. WALL CONTROL #CC-4BRL-WH REQUIRES 3#18 ON BMJ ON BUS #2.
14. ROUTE 2#12 TO LUTRON XPJ CONNECT TO BUS #2.
15. CONTINUATION OF CIRCUIT FROM INGRADE SPOT LIGHT SERVING FLAG POLE. SEE PLAN SHEET E-1.1.
16. CONNECT EXIT SIGN TO NORMAL POWER SOURCE AND EMERGENCY SOURCE UNSWITCHED.
17. ECOSYSTEM BUS SUPPLY #1.
18. ECOSYSTEM ZONE DIMMING MODULE, BMJ.
19. CONTACT CLOSURE RELAY, DMX-CCD-8.
20. SOFT SWITCH 128, 2 OR 3 BUTTON CONTROL SWITCH.
21. ECOSYSTEM ZONE SWITCHING MODULE, XPJ.
22. LUTRON CABLE GRX-PCBL-46(LCPLENUM RATED) OR 1 BELDEN #9461. ADD 1#18 AWG FOR EMERGENCY SENSING.
23. (1) 1 1/2"C. WITH LIGHTING CIRCUITS HOMERUNS TO LIGHTING PANEL '1H'. ALL LIGHTING CONDUCTORS SHALL BE #10 AWG (HOT, NEUTRAL AND GROUND).
24. (1) 1 1/2"C. WITH LIGHTING CIRCUITS HOMERUNS TO LIGHTING PANEL '2H'. ALL LIGHTING CONDUCTORS SHALL BE #10 AWG (HOT, NEUTRAL AND GROUND).
25. (1) 1 1/2"C. WITH LIGHTING CIRCUITS HOMERUNS TO LIGHTING PANEL '2LSH'. ALL LIGHTING CONDUCTORS SHALL BE #10 AWG (HOT, NEUTRAL AND GROUND).
26. PROVIDE 20A. 120V EMERGENCY POWER. SEE PANEL SCHEDULES FOR DESIGNATED POWER CIRCUIT TO THIS PANEL.
27. PROVIDE ONE(1) 144" LONG FULL LENGTH FIXTURE WITH TWO MOUNTING BRACKETS.
28. MOUNT ON UNDERSIDE OF CABINET.
29. DOWNLIGHT IN SOFFIT ABOVE DRINKING FOUNTAIN.
30. WALL LIGHT SWITCH NEAR JANITOR DOOR TO CONTROL LIGHTS IN JANITOR ROOM.
31. PROVIDE J-BOX ON WALL FOR HARDWIRED POWER CONNECTION TO LED CANDLES. COORDINATE POINT OF POWER CONNECTION POINT OF POWER CONNECTION WITH LED CANDLES PROVIDER/ INSTALLER PRIOR TO ROUGH-IN.
32. FLOOD LEVEL EXIT SIGN COORDINATE EXIT SIGN MOUNTING HEIGHT WITH ARCHITECT PRIOR TO ROUGH-IN.

KEYPLAN

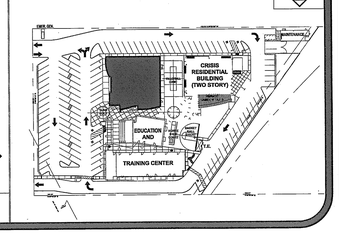

County of Orange
OC PUBLIC WORKS
Architecture & Engineering

Revisions

Sym.	Descrip.	Date	By

0742

Consultants
FBA ENGINEERING
Consulting Engineers
3420 Irvine Avenue
Newport Beach, California 92660-3189
T: (949) 852-9995 F: (949) 852 1057
FBAeng2.com
FBA # 446.025
Drawn: Chkd: Date 1-26-09

A-E Seal

A-E ALEXANDER + HIBBS, AIA, INC.
ALEXANDER + HIBBS, AIA, INC.
Architecture and Planning
3420 Irvine Avenue, Suite 1
Newport Beach, CA 92660
(949) 852-0888
Design RH Chkd. JP Date Nov. 26, 2009

Sht Title BUILDING 2 - LIGHTING PLAN
Project COUNTY OF ORANGE HEALTH CARE AGENCY
401 SOUTH TUSTIN STREET
401 SOUTH TUSTIN STREET
ORANGE, CA 92866
PROJ. NO. 100-042-P210-4200

Plan No. 52333-03608

Sheet E-2.2.2

0742 COUNTY OF ORANGE HEALTH CARE AGENCY 401 SOUTH TUSTIN STREET

Filename: S:\Projects\0-2.2.2\0005 Bldg 2 Lighting Plan.dwg
Plotted by: Hibbs, Jeffrey Thursday, January 08, 2009 - 8:48 AM
Layout: Layout 2, E-2.2.2 Layout, Layout2 Model